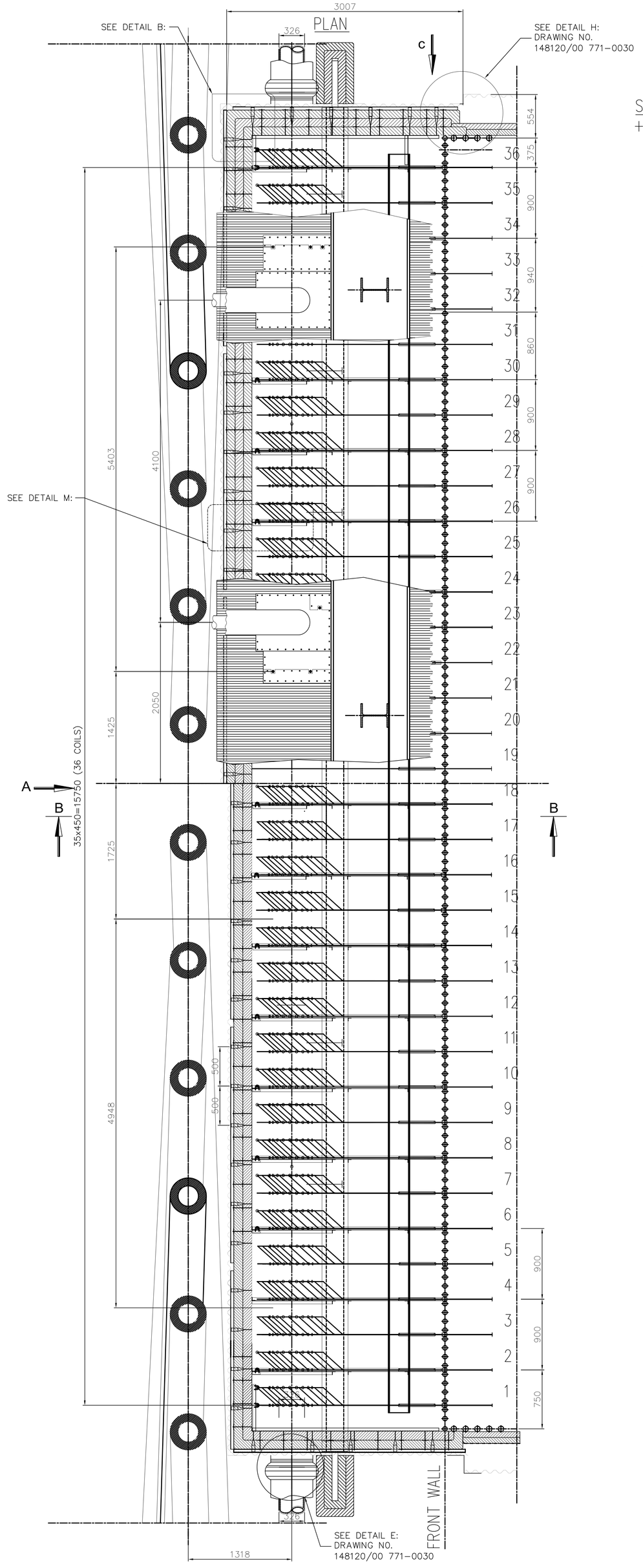

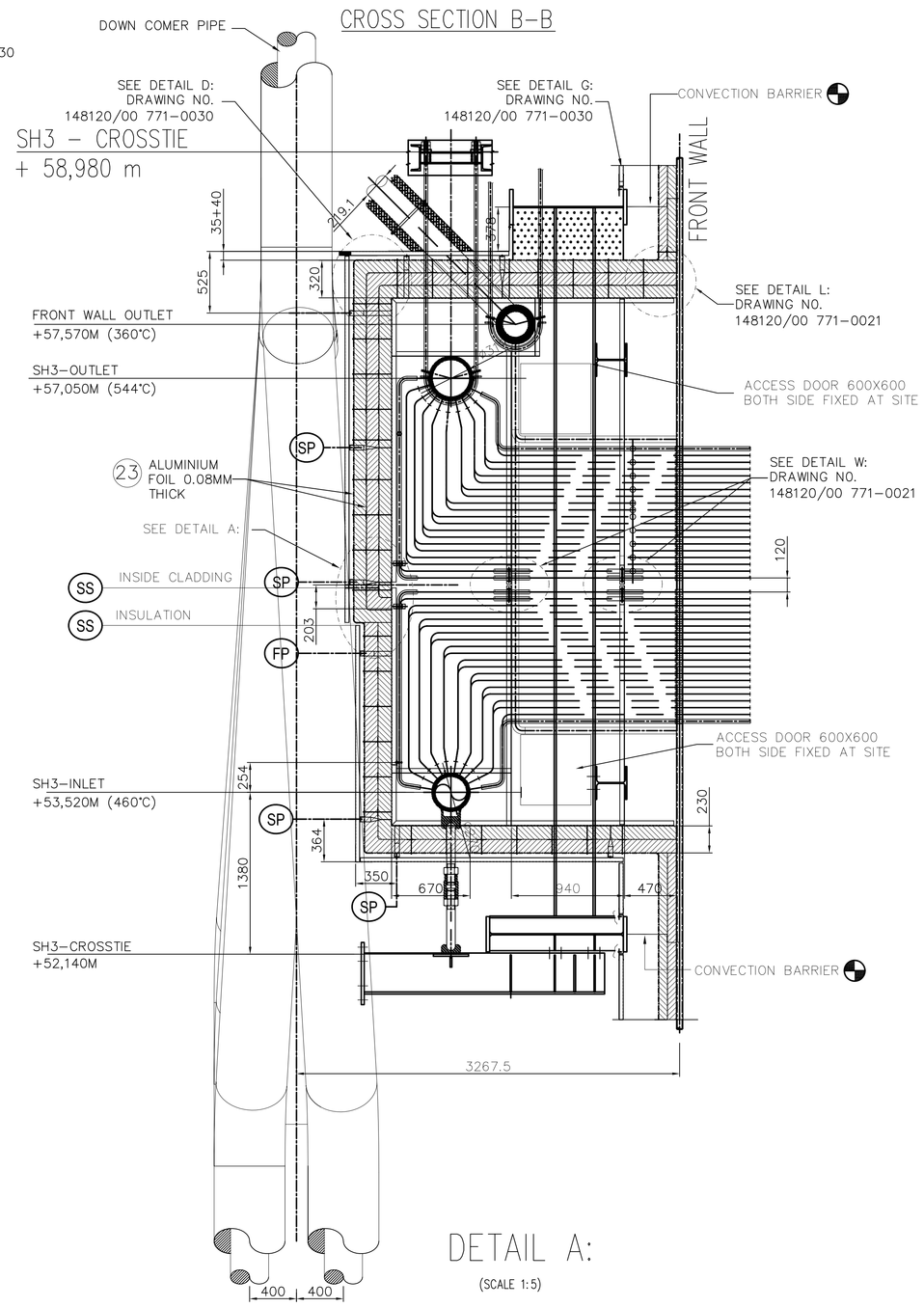

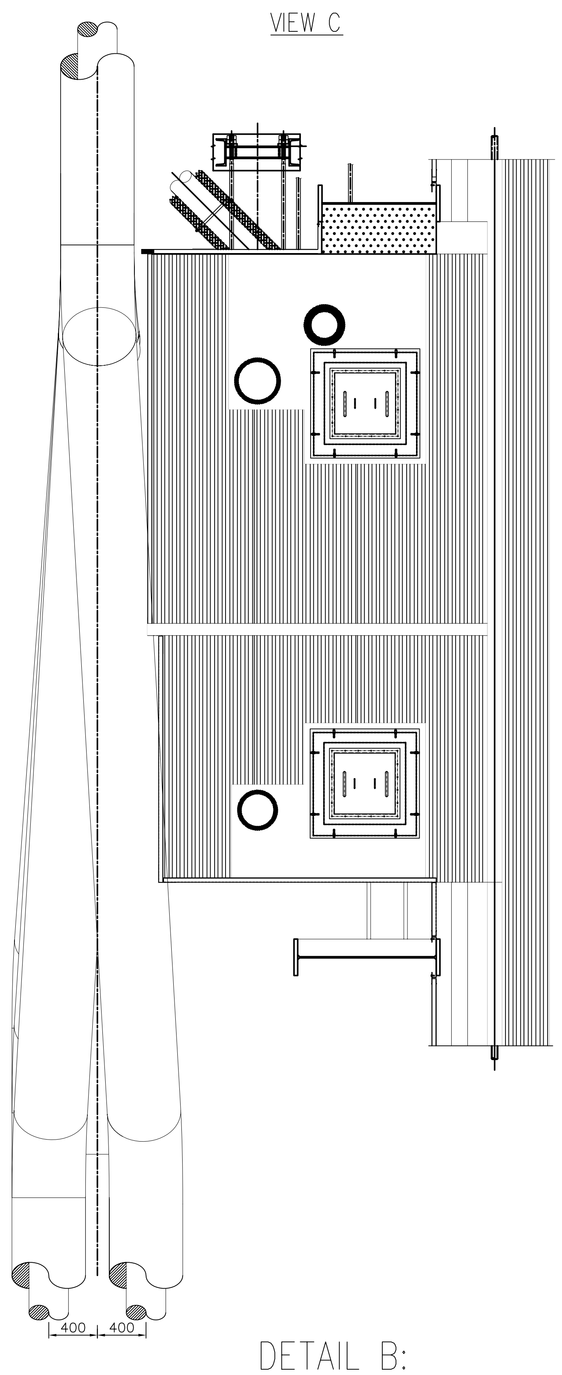

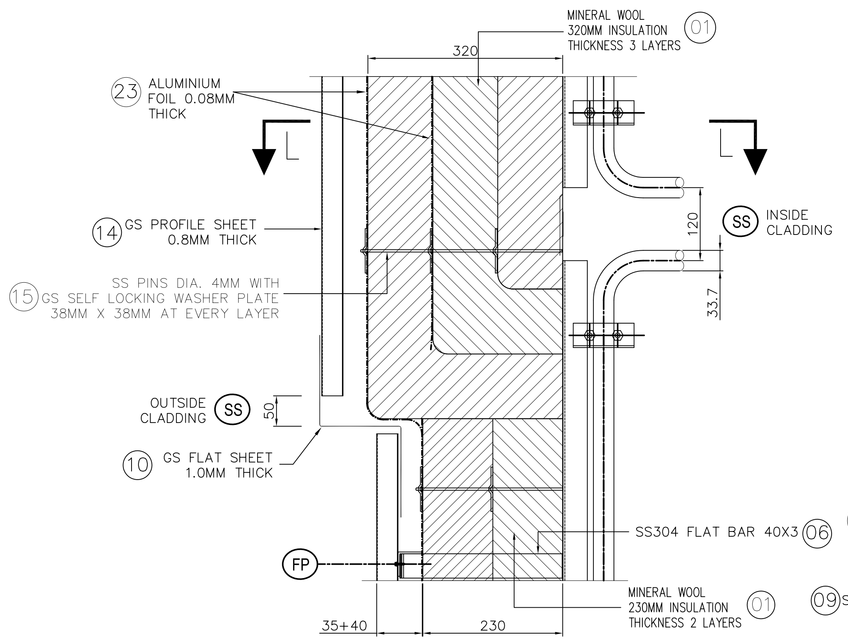

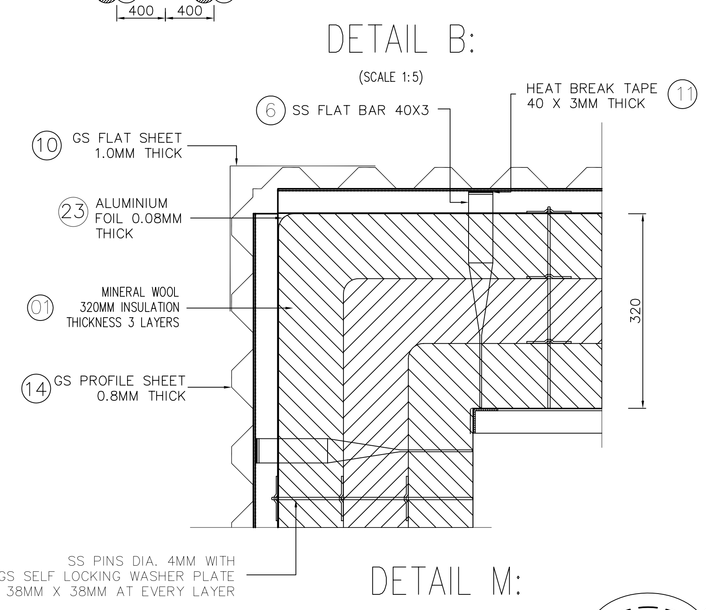

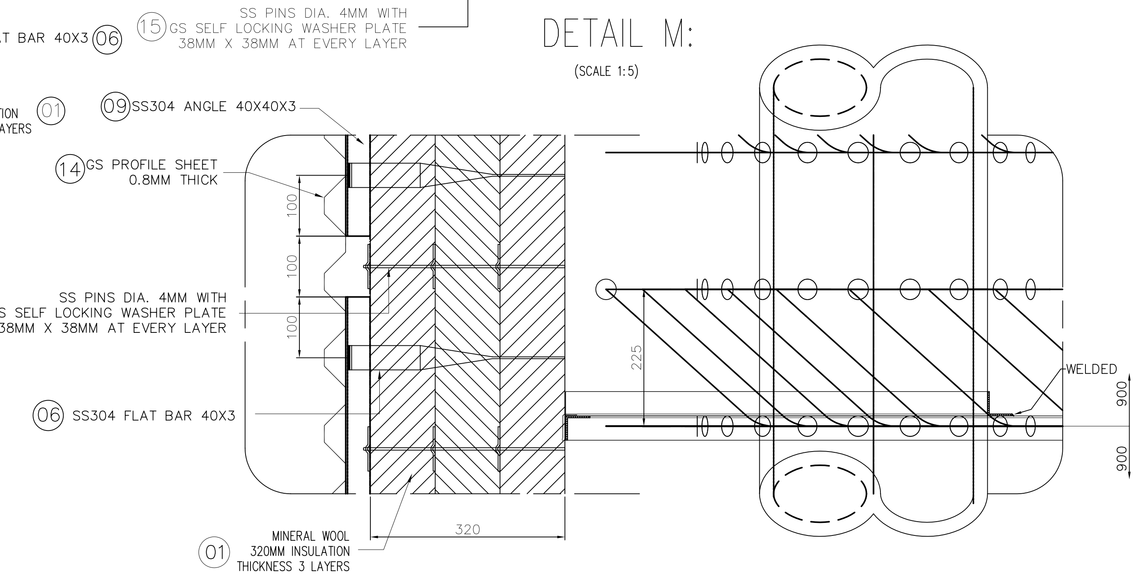

NOTE :

1- FOR INSULTEC IT IS STRICTLY FORBIDDEN
- EXECUTION OF WELDING OR DRILLING WORK ON PRESSURE PARTS (HEADERS, TUBES)
- EXECUTION OF WELDING OR DRILLING WORK ON ANCHORS UNDER LOADING CONDITION
2- THE EXECUTION OF THE INSIDE CLADDING MUST BE VERY TIGHT (NOT ABSOLUTLY) ALL OPENINGS, HOLES AND SHEET PENETRATIONS MUST BE CLOSED RESPECTIVELY TIGHTENED WITH SLIDING ROSETTS.
3- THE SELF ADHESIVE HEAT BREAK TAPE (40X3MM) SHALL BE INSTALLED BETWEEN SS ANGLE 40X40X3 OR SS FLAT 40X3 SUBGIRT AND CLADDING SHEET IN EVERY SITUATION TO AVOID ELECTROLYTIC CORROSION BETWEEN DISSIMILAR METALS.
4- FLAT SHEET CLADDING ARE SCREWED AT 150MM PITCH (6 PIECES PER METER)
5- FOR THE FIXATION OF PROFILE CLADDING SHEET ON THE SUPPORTING STRUCTURE (SUBGIRT), GS SELF DRILLING SCREW DIA 4.8X19MM IS TO BE USED IN AREA OF EDGE AT EVERY BEAD VALLEY AND IN NORMAL AREA IN EVERY SECOND BEAD VALLEY.
6- FOR THE FIXATION BETWEEN CLADDING SHEET OVERLAPS, GS SELF TAPPING SCREWS DIA 4.8MMX12MM LONG SHALL BE USED ADDITION TO THE SCREWS, WHEREEVER REQUIRED OR SHOWN IN THE DRAWINGS.
7- THE SUBGIRT FRAME SHALL BE SS304 ANGLE 40X40X3MM AND SPACER SHALL BE SS304 FLAT BAR 40X3MM THICK TWISTED TO TAKE EXPANSION.
8- SS304 INSULATION PINS DIA.4MM ARE TO BE WELDED ON THE INNER CASING, MINIMUM OF 6 PIECES PER SQ METER ON THE ROOF. FOR SOME DIMENSION ARRANGEMENTS COULD BE MADE DURING ERECTION. 7-8 PIECES PER SQ METER FOR SIDE WALL AND 10 PIECES PER SQ METER FOR THE DUCT BOTTOM.
9- IF WELDING SPACERS TO SS304 SHEET 1.5MM, THE SPACERS MUST BE PLACED DIRECTLY NEAR THE SUPPOR CONSTRUCTION OF THE SS304 SHEET OTHERWISE SPACER SHALL BE WELDED DIRECTLY TO TO THE SUPPORT CONSTRUCTION.
10- THE MINERAL WOOL INSULATION MATERIAL ARE SUPPLIED TOGETHER WITH SS304 WIRE MESH.
11- THE MATERIAL FOR THE FRAME AND SPACER IS STAINLESS STEEL 304.
12- SEE WELDING DETAIL FOR KIND OF WELDING FOR SPACER AND CASING.
13- PIN DIAMETER OF 4MM SHALL BE USED TO HOLD THE MINERAL WOOL INSULATION.

1. MINERAL WOOL BLANKET WITH HEX SS 304 WIRE MESH
2. GS/SS SELF DRILLING SCREW DIA 4.8MM X 19
3. GS/SS SELF TAPPING SCREW DIA 4.2MM X 12
4. GS/SS RIVET DIA 4.8MM X 12MM
5. SS 304 FLAT BAR 40 X 3MM
6. FLAT BAR 40 X 3MM
   MATERIAL QUALITY:
   <300°C : S235JR
   301-480°C : P235GH
   481-500°C : P295GH OR SS304
   501-530°C : 16Mo3 OR SS304
   531-570°C : 13CrMo4-5 OR SS304
7. ACOUSTIC SHEET (DIKEL) 3MM THICK
8. OMEGA SPRING 30MM WIDE X 100MM LONG
9. SS 304 ANGLE 40 X 40 X 3
10. FLAT CLADDING
    INDOOR : GS FLAT SHEET (1MM THICK)
    OUTDOOR : ALUMINIUM FLAT SHEET (1.2MM THICK)
11. HEAT BREAK TAPE 40 X 3MM
12. GLASS CLOTH (REFER TO NOTE 11)
13. CS BENT PLATE 100 X 50 X 1.5MM
14. PROFILE CLADDING
    INDOOR : GS PROFILE SHEET (0.8MM THICK)
    OUTDOOR : AL PROFILE SHEET (1MM THICK)
15. SS 304 PINS DIA. 4MM WITH GS SELF LOCKING WASHER PLATE
16. PROFILE SEALING STRIP
17. SS 304 U BOLT M8 TO SUIT PIPE DIA AT 500MM PITCH
18. SS 304 SHEET 1.5MM THICK
19. SS 304 SQUARE PIPE 50X50X3 100MM LONG
20. SS 304 SHEET 1.0MM THICK
21. BOLT AND NUT 6MM DIA X 25MM LONG
22. INSULATION ROPE 10MM DIA
23. ALUMINIUM FOIL 0.08 MM THICK
24. SS BAND 19MM WIDE
25. GS PERFORATED SHEET 1MM THICK

LEGEND

- CP = CONVECTION BARRIER
- FP = FIX POINT
- SP = SLIDING POINT
- SS = SLIDING SEAM
- Δ = REVISION NUMBER
- ◯ = ITEM NUMBER
- X = SCREW LENGTH +20MM
- S = INSULATION THICKNESS

DRAWINGS VALID FOR UNIT -1 AND UNIT-2

Rev.	Revision Date	Created by	Checked by	Approved by	Description	Status
0	19.08.2009	RVP	IC	PRS	FIRST ISSUE	

Project (Проект): Maritza East I Power Station
ТЕЦ Марица Изток 1

Company (Възложител):

Space for stamp of Municipality of Galabovo
Място за печат на Община Гълъбово

Space for further stamps
Място за допълнителни печати

Area for Stamp of EQE Control OOD (ICS)
Място за печат на EQE Control OOD(Ниезов, надзор)

ASpace for stamp of authorized Bulgarian Designer
Място за печат на лицензиран Български проектант

Main Contractor / Главен изпълнител
ALSTOM
Power Generation AG
Power Boiler GmbH

Partner of Main Contractor / Партньор на главния изпълнител

Resp. dept. /Отговорен отдел: INSULTEC-ENGG	Created by / Изготвил: RVP	Checked by / Проверил: IC	Approved by / Одобрил: PRS	Format / Формат: A0
Scale / Мащаб: 1:25		Class. no. (e.g. KKS) / Класифик. №	for Company Review & Approval: / За одобрение от Възложителя: No	
Derived from / Произлиза от	Replaces / Замяства	Doc. Type / Тип на документа: ES	Document Status / Статус на документа: RFC	Sub Site No. / Подобект №
Logo of Legal Owner / Официален собственик: INSULTEC	Sub Contractors Doc Number / № на документа на подизпълнителя: C625-MANUAL - 013		Consortium Partner Document Code / Код на документа на партньора от консорциума: 148120/00 771-0020	
	Title, Subtitle / Заглавие, подзаглавие: HEADER BOXES SH-3 INLET, OUTLET		Project Doc. Number / № на проектния документ: MTZ/12/B/-----00771/ES/020	
			Rev. / Рев: 0	Date / Дата: 19.08.2009	Lang. / Език: ENG	Sheet / Страница: 1 / 1

We reserve all rights in this document and in the information contained herein. Reproduction, use or disclosure to third parties without express authority is strictly forbidden. Правата върху този документ и информацията в него са запазени. Размножаването, използването или разпространяването на трети страни без специални пълномощия е строго забранено